Q230831-02
(5203-33A)

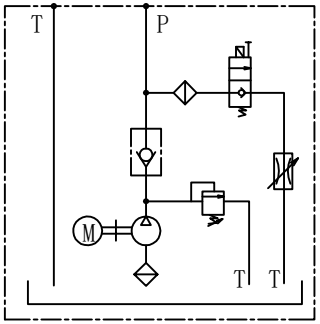

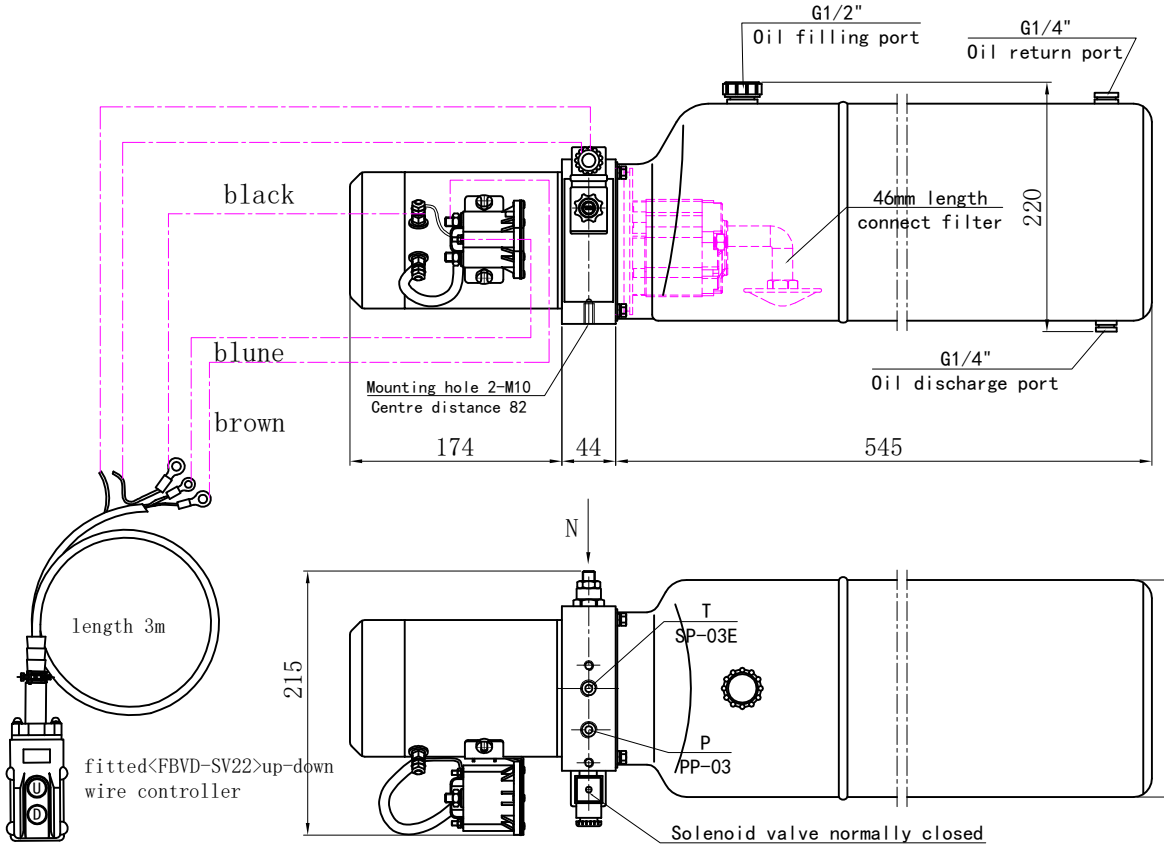

Technical Data
Code: MD24220-05A-T
Manifold: 30100510011 <C012>
Motor: <MD24220>24V 2.2kW 2800rpm+Motor cover
Pump: <CBKL-G2250>2.5cc/r
Control valve: <SCV(E)-Y024DC>Solenoid valve normally closed with emergency button
<CV-02A>check valve <RV-03>relief valve
<FCV-01>Flow control valve
Pressure: 17Mpa
Tank: 50112031401(metal)<12L-TS5040-VH>
Mounting: Horizontal
Oil port: P/T=G3/8″
Relief valve and flow control valve return port install oil return pipe
Flow control valve return port install elbow pipe

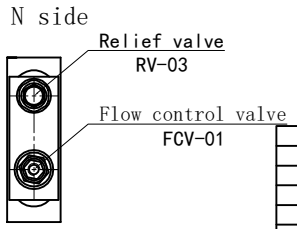

Assembly drawing

1:3.5

VIBO 威博液压 VIBO Hydraulics

Outline drawing

MD24220-05A-T