5203-05A

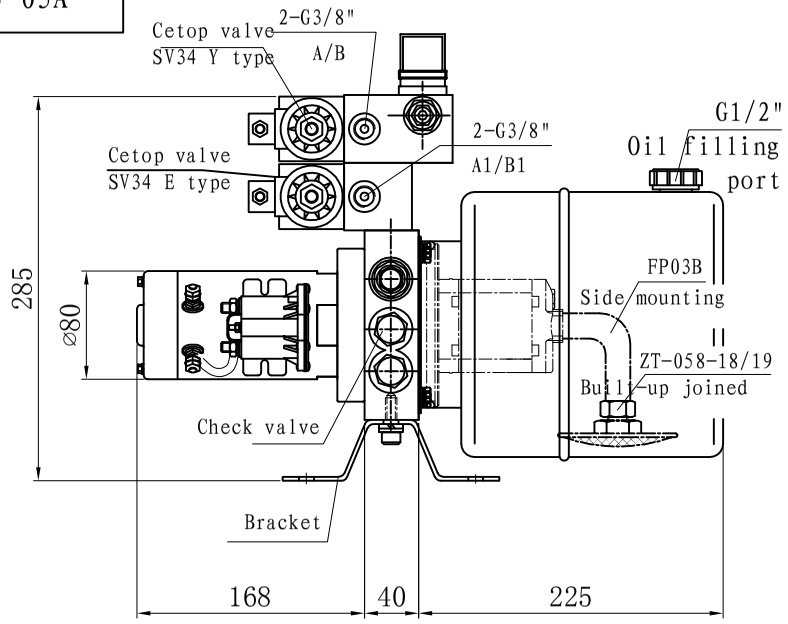

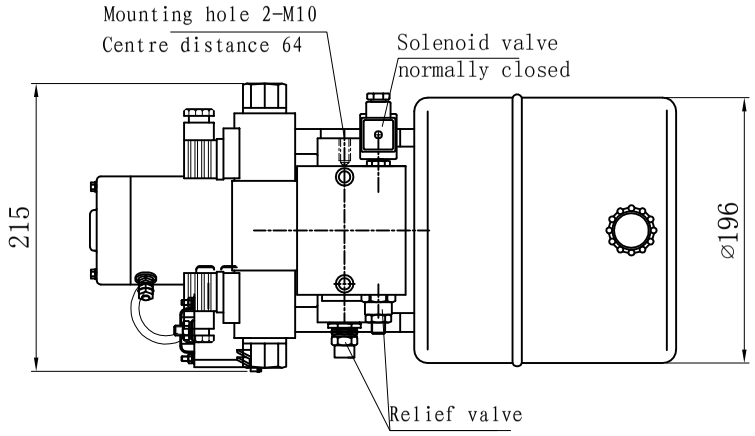

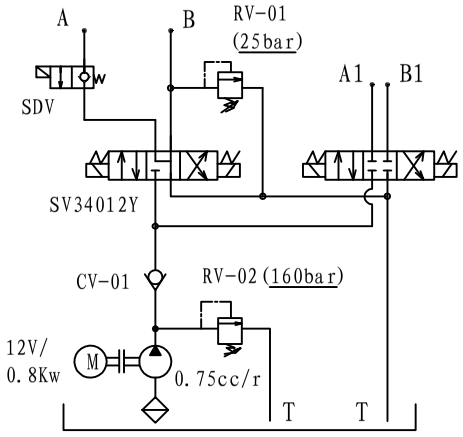

Hydraulic Circuit

Bracket size

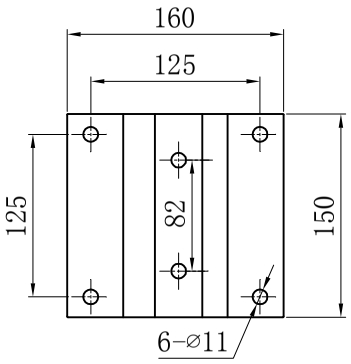

Technical Date

Manifold: 300.008.300.01(CME-01-02)
Motor: 12V 0.8Kw 3800rpm<MD12080SY>
Pump: <CBK-F1075>0.75cc/r
Control valve:
<SV34012Y>DC Cetop valve SV34 Y type
<SV34012E>DC Cetop valve SV34 E type
<SDV-012DC>12VDC Solenoid valve normally closed
<RV-01>Relief valve <RV-02>Relief valve
<CV-01>Check valve
Pressure: 16Mpa
Tank: <5L-TS5203-01-H>5L(steel)
Mounting: Horizontal
Oil port: A/B=G3/8"
Plus: Mounting bracket<FM-82>

VIBO Huaian VIBO Hydraulics Co., Ltd	VIBO HYDRAULICS
	OUTLINE DRAWING
	CME-VB1404168-015