5203-10A

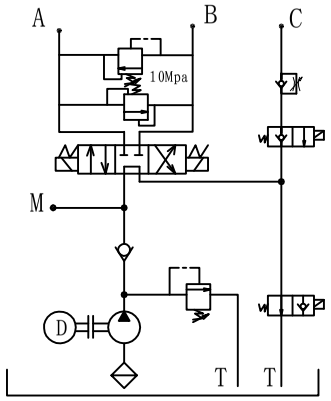

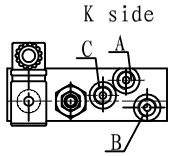

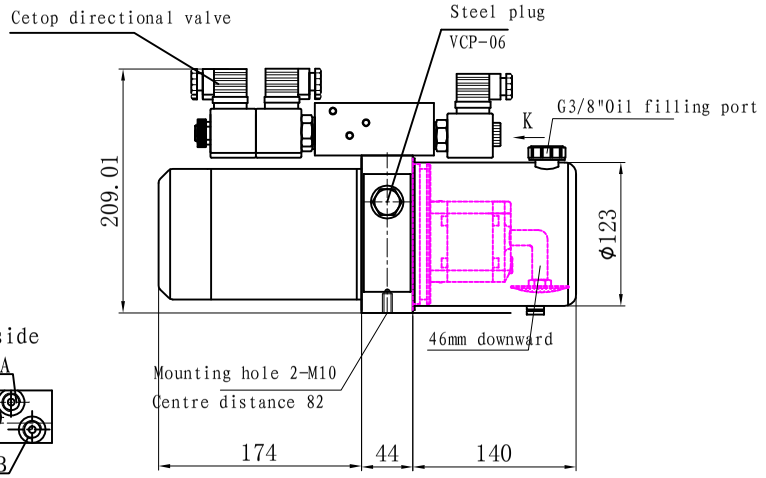

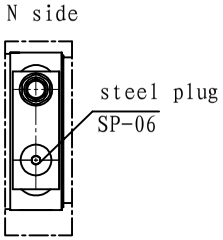

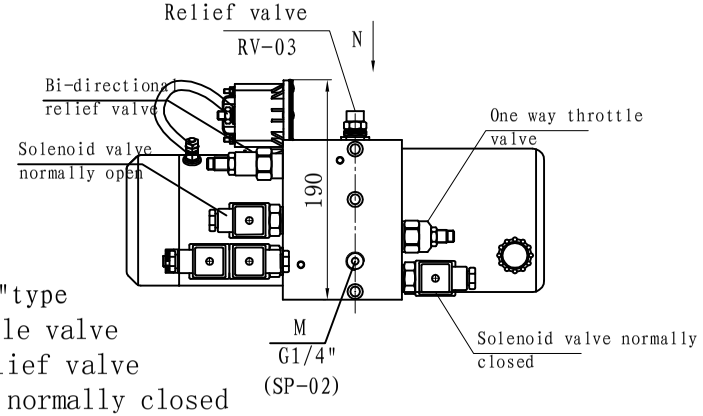

Technical Date

Manifold: 300.005.105.01 <CMC1-02-02>

Modular block: 400.002.023.01A <MB-81>

Motor: <MD12160>12V 1.6Kw 2600rpm

Pump: <CBK-F116>1.6cc/r

Control valve: DC12V Cetop directional valve"G"type <SCV34012G>round coil, <LFCV-01>One way throttle valve <CV-02A>Check valve, <SRV-03>Bi-directional relief valve <RV-03>Relief valve, <SCV-012DC>Solenoid valve normally closed <SOV-012DC>Solenoid valve normally open with round coil

Pressure: 20Mpa

Tank: 52122022201 (steel)<1L-TS120A140-H>

Mounting: Horizontal

Oil port: A/B/C=G1/4"

N.W: 13.58kg

	VIBO Huaian VIBO Hydraulics Co., Ltd	VIBO Hydraulics
		Outline Drawing
	比 例 1:3.5	CMC-VB