5203-15A

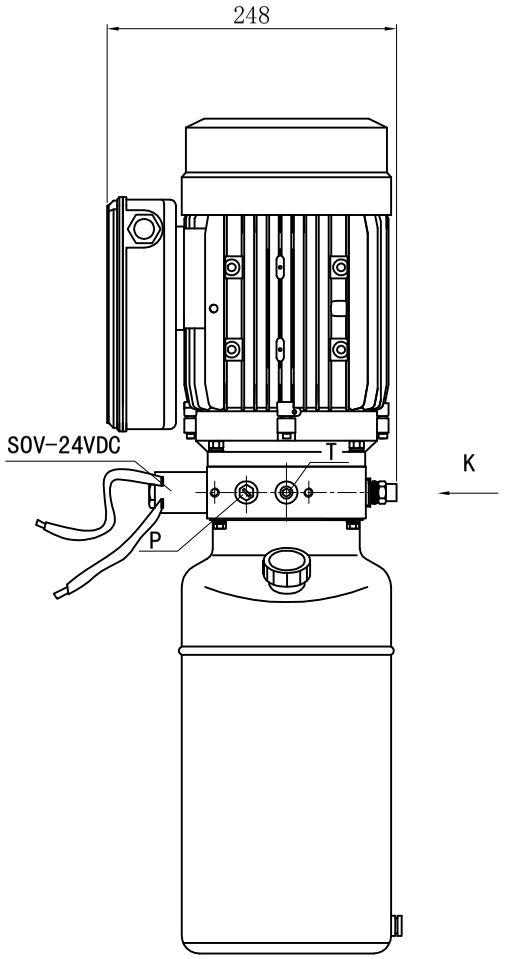

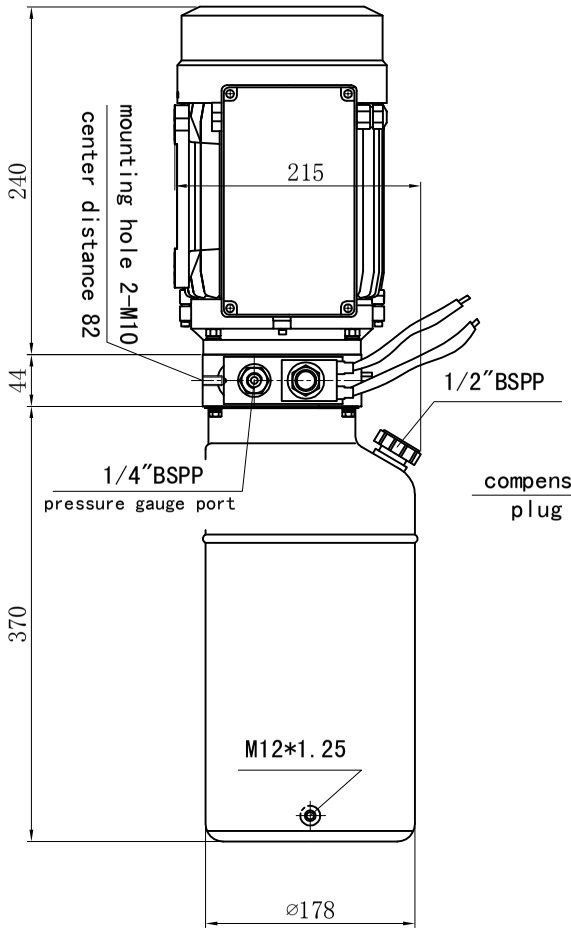

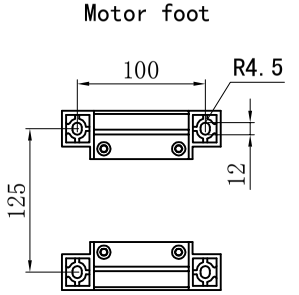

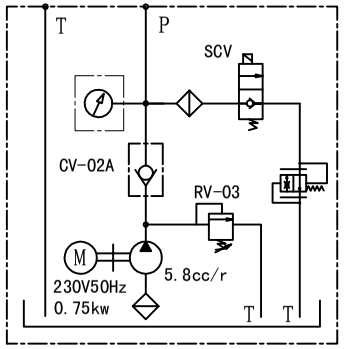

Schematic Circuit

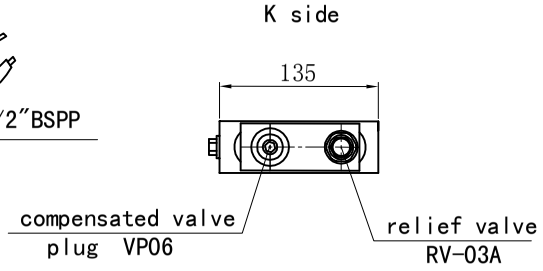

Technical Date
Manifold Code:300.005.201.01 CMC1-03-02
Motor:230V,0.75Kw,1420rpm
50Hz,1PH<ML230075-4F-HS>
Pump:5.8cc/r<CBK-F158>
Pressure:5Mpa
Tank:51113062408 <8L-TS120C370-V>
Mounting:Vertical
Oil port:P/T=G1/4"
Solendoild release valve:<SCV-024DC>
Pressure gauge port:G¼"