5203-19A

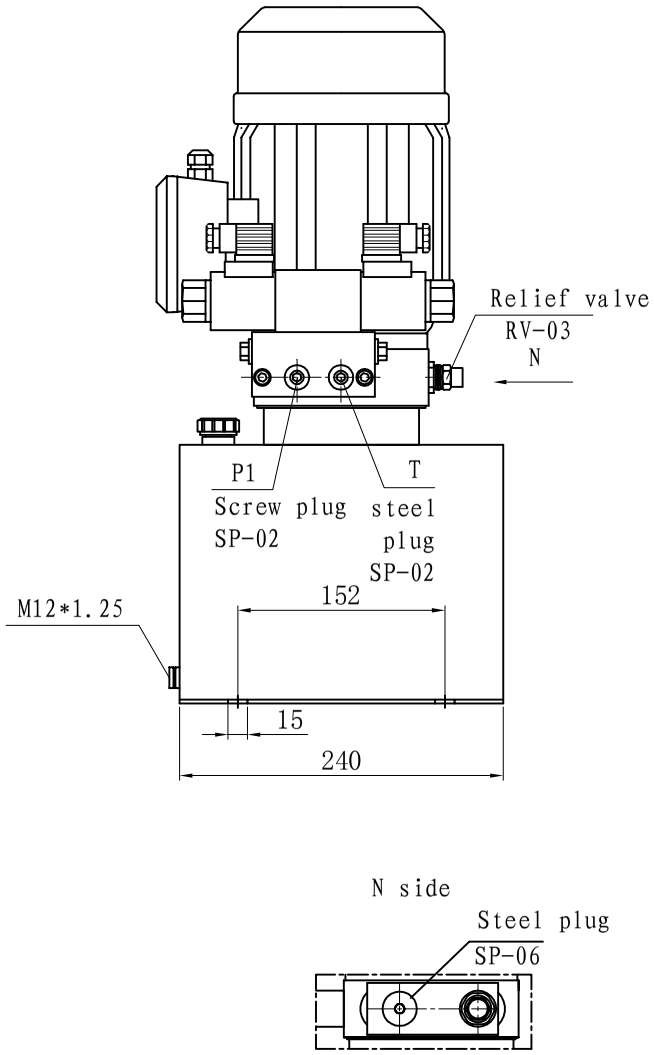

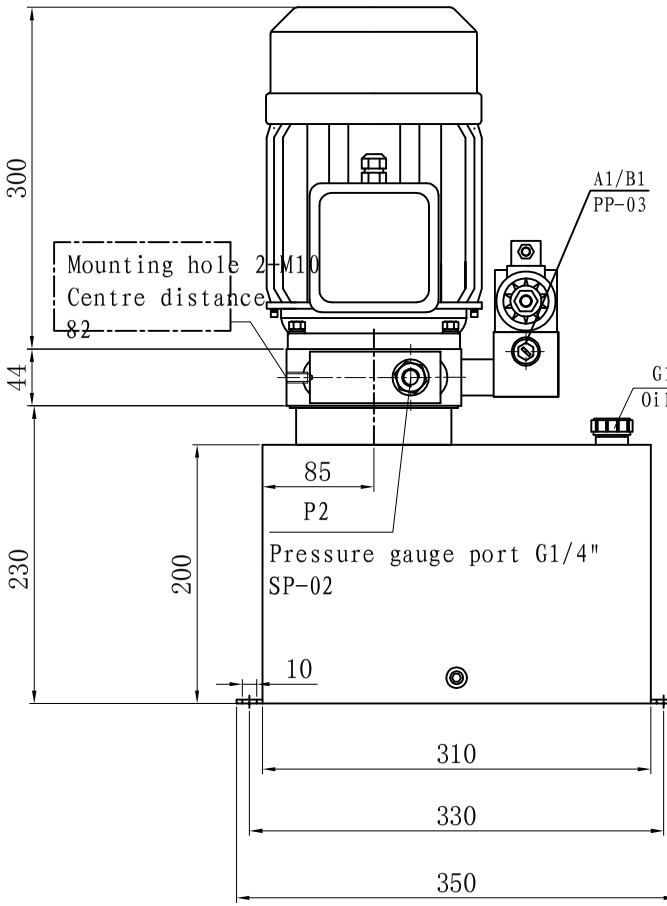

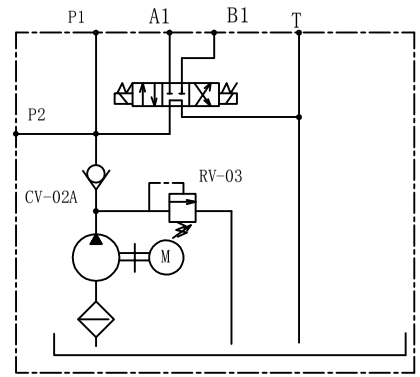

Hydraulic schematic

N side

Technical Date
Manifold: 300.005.100.01 <C001>
Motor: 380V 2.2Kw 1420rpm
3PH 50Hz(MS380220-4F-HS)
Pump: 2.0cc/r<CBK-F120>
Control valve: 24VDC SV34 Cetop valve
"G"type<SV34024G>
Check valve<CV-02A> Relief valve<RV-03>
Pressure: 16Mpa
Tank: 51136052076
12L(steel)<12L-TS5203-08-V>
Mounting: Vertical
Oil port: A1/B1=G3/8"
P1/P2/T=G1/4"
Modular block: 400.002.002.17
(MB11-CMC/E-2D1)

	VIBO Huaian VIBO Hydraulics Co., Ltd	VIBO Hydraulics
2017-03-31	1:3.5	Outline Drawing
		CMC